	INDIAN INSTITUTE OF TECHNOLOGY PATNA **DEPARTMENT OF PHYSICS** **Tutorial 6**	
05/02/21	**PH103**	
1	**The Earth's axis of rotation precesses about the perpendicular to its orbital plane with a period of 25810 yr. Calculate the torque on the Earth that is causing this precession.**	
2	**Consider a cylinder moving parallel to its axis with velocity v in free space. A perturbing force F acts on the cylinder for time Δt. Find the angular frequency of rotation** 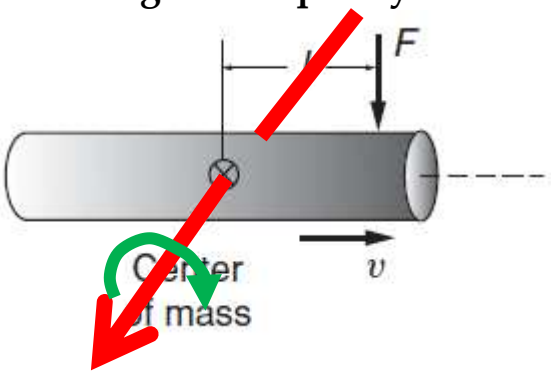 **a) Consider a cylinder spinning rapidly with angular momentum L_s moving parallel to its axis with velocity v in free space. A perturbing force F acts on the cylinder for time Δt. Find the angle through which the cylinder processes.** 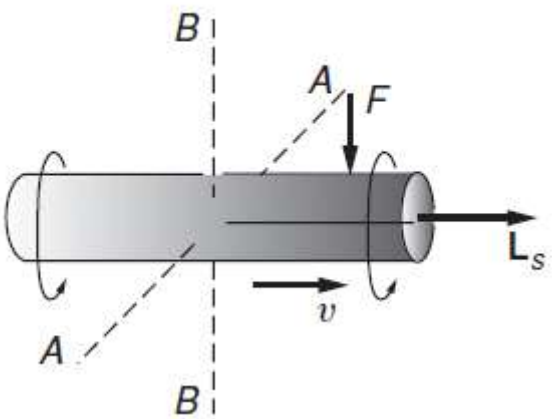 	

3	**Analyze stability of symmetric top having diagonal elements of the moment of inertia tensor $I_1=I_2=I$, and I_3, using Euler equation.**